A1	DRG. No. 0186,000 /C	FIRST USED ON	THIRD ANGLE PROJECTION	IF IN DOUBT ASK	DO NOT SCALE

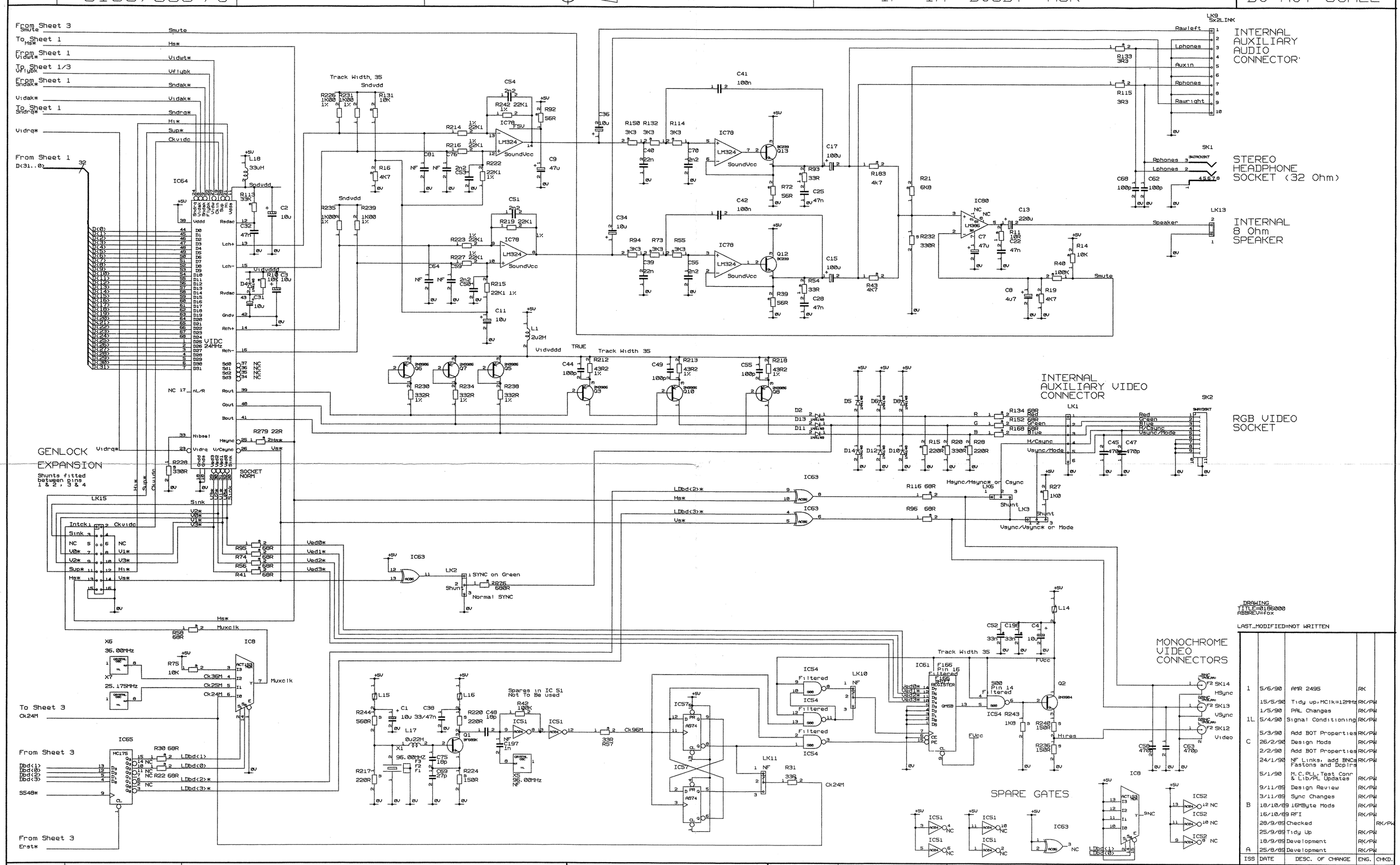

ISS	DATE	DESC. OF CHANGE	ENG.	CHKD.
1	5/6/90	AMR 2495	RK	
	15/5/90	Tidy up, MClk=12MHz	RK/PW	
	1/5/90	PAL Changes	RK/PW	
1L	5/4/90	Signal Conditioning	RK/PW	
	5/3/90	Add BOT Properties	RK/PW	
C	26/2/90	Design Mods	RK/PW	
	2/2/90	Add BOT Properties	RK/PW	
	24/1/90	NF Links, add BNCs Fastons and Dcplrs	RK/PW	
	5/1/90	M.C.PLL Test Conr & Lib/PL Updates	RK/PW	
	9/11/89	Design Review	RK/PW	
	3/11/89	Sync Changes	RK/PW	
B	18/10/89	16MByte Mods	RK/PW	
	16/10/89	RFI	RK/PW	
	28/9/89	Checked		RK/PW
	25/9/89	Tidy Up	RK/PW	
	18/9/89	Development	RK/PW	
A	25/8/89	Development	RK/PW	

SCALE		ALL DIMENSIONS IN mm UNLESS OTHERWISE STATED
MATERIAL		
FINISH		
WHOLE No. TOL.	DECIMAL No. TOL.	ANGLE TOL.

Copyright of this drawing is reserved by ACORN COMPUTERS LTD. It is issued on condition that it is not copied, reproduced or disclosed to a third party, either wholly or in part, without the consent in writing of ACORN COMPUTERS LTD.

© COPYRIGHT 1990
ACORN COMPUTERS Ltd
FULBOURN ROAD
CHERRY HINTON
CAMBRIDGE
CB1 4JN

TITLE

MAIN PCB CIRCUIT DIAGRAM

Video/Audio

Sheet 2/5

ACORN COMPUTERS Ltd | A1 | DRG. No 0186,000 /C